GROUP NO.	RATINGS kV NOM.	kV MAX.	kV BIL	AMPS	kA MOM.	POST INSUL NEMA TR#	DIMENSIONS IN INCHES MILLIMETERS SHOWN IN [ ] "A"	"B"	"C"	"D"	"E"	"R"	WEIGHT/POLE (INCL. INSUL.) LBS	Kg
G01	7.2	8.3	95	600	40	202	9.65 [245]	7.50 [191]	25 [635]	15 [381]	7 [178]	17.66 [449]	50	[22.7]
G02				1200	61								57	[25.9]
G03				2000	100		9.9 [251]						64	[29.1]
G04	14.4	15.5	110	600	40	205	12.15 [308]	10 [254]	25 [635]	15 [381]	10 [254]	17.66 [449]	62	[28.1]
G05				1200	61								69	[31.3]
G06				2000	100		12.40 [315]						77	[35.0]
G07	23	27	150	600	40	208	16.15 [410]	14 [356]	28 [711]	18 [457]	12 [305]	20.63 [524]	92	[41.8]
G08				1200	61								97	[44.0]
G09				2000	100		16.40 [417]						104	[47.2]
G10	34.5	38	200	600	40	210	20.15 [512]	18 [457]	34 [864]	24 [610]	18 [457]	26.6 [676]	107	[48.6]
G11				1200	61								110	[49.9]
G12				2000	100		20.40 [518]						121	[54.9]
G13	46	48.3	250	600	40	214	24.15 [613]	22 [559]	40 [1016]	30 [762]	22 [559]	32.58 [828]	166	[75.3]
G14				1200	61								172	[78.0]
G15				2000	100		24.40 [620]						182	[82.6]
G16	69	72.5	350	600	40	216	32.15 [817]	30 [762]	52 [1321]	42 [1067]	32 [813]	44.55 [1132]	221	[100.2]
G17				1200	61								228	[103.4]
G18				2000	100		32.40 [823]						240	[108.9]
G19	7.2	8.3	95	1600	70	202	9.65 [245]	7.50 [191]	25 [635]	15 [581]	7 [178]	17.66 [449]	61	[27.7]
G20	14.4	15.5	110	1600	70	205	12.15 [308]	10 [254]	25 [635]	15 [381]	10 [254]	17.66 [449]	73	[33.2]
G21	23	27	150	1600	70	208	16.15 [410]	14 [356]	28 [711]	18 [457]	12 [305]	20.63 [524]	101	[45.9]
G22	34.5	38	200	1600	70	210	20.15 [512]	18 [457]	34 [864]	24 [610]	18 [457]	26.6 [676	116	[52.7]
G23	46	48.3	250	1600	70	214	24.15 [613]	22 [559]	40 [1016]	30 [762]	22 [559]	32.58 [828]	180	[81.7]
G24	69	72.5	350	1600	70	216	32.15 [817]	30 [762]	52 [1321]	42 [1067]	32 [813]	44.55 [1132]	232	[105]

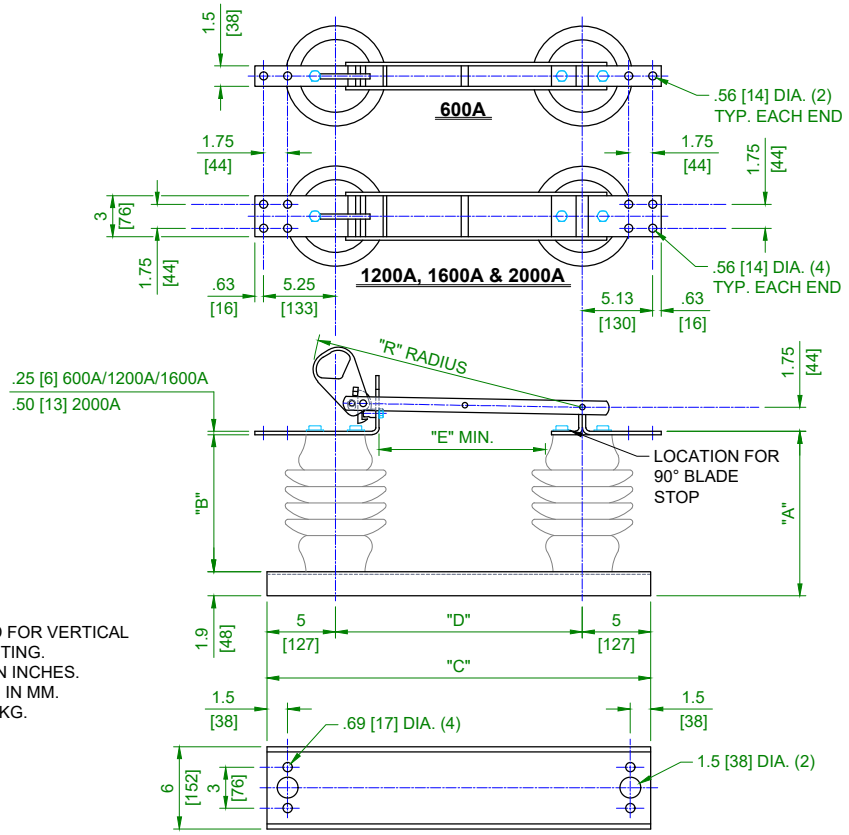

NOTES:
1. INSULATORS INVERTED FOR VERTICAL OR UNDERHUNG MOUNTING.
2. ALL DIMENSIONS ARE IN INCHES.
3. DIMENSIONS IN [ ] ARE IN MM.
4. WEIGHTS IN [ ] ARE IN KG.

USE STANDARD DRAWING C102A230 FOR 5" CHANNEL BASE

Cleaveland/Price Inc.

REV	VERSION	DRAWN	CHECKED	APPROVED	DATE	SHEET	SCALE
R	2	DMW	GH		09/30/1987	1 OF 1	PROPORTIONAL

LCO-C COPPER HOOKSTICK DISCONNECT SWITCH 7.2-69 kV, 600-2000 A WITH 3" B.C. INSULATORS AND 6" CHANNEL BASE

DWG NO. C102A150