RTU	N/A
RADIO	N/A
CHARGER VOLTS	120 A.C.
CHARGER AMPS	5
HEATER VOLTS	125
HEATER WATTS	63
SCHEMATIC	C128B996
M & C WIRING DIAGRAM	C132B555
RTU WIRING DIAGRAM	C132B556

ITEM	DESCRIPTION	STYLE NO.	G001
H001	MAIN ASSEMBLY	C132D042G001	1
H002	CONTROL MODULE ASSEMBLY	C128C055G001	1
H003	POWER MODULE ASSEMBLY	C128A151G004	1
H004	ACCESS PLATE ASSEMBLY	C413A441G001	1
H005	RTU MOUNTING ASSEMBLY	C132C053G001	1
R200	MOTOR GEARBOX ASSEMBLY	C132B042	1
R205	ALUMINUM ENCLOSURE ASSEMBLY	C132D041G001	1
R210	100' OR LESS MOTOR CABLE	C132B202	1
R215	100' OR MORE MOTOR CABLE	C132B203	1

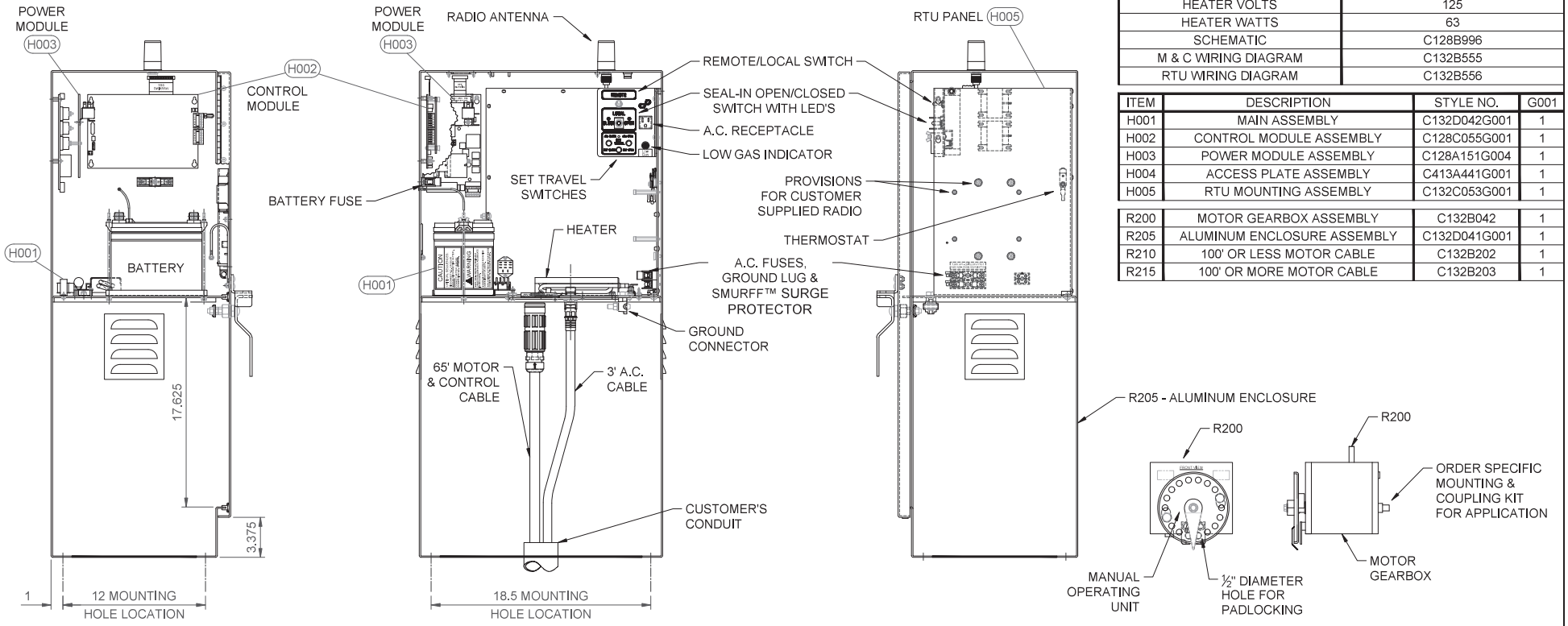

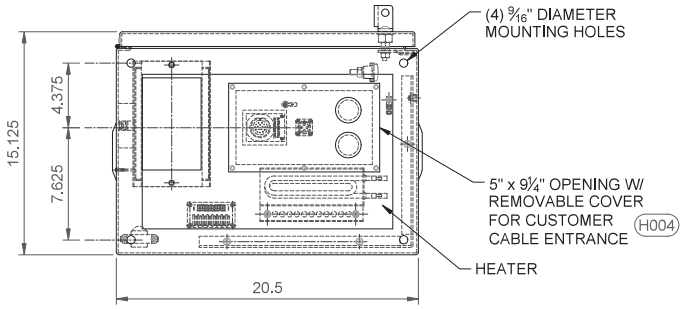

C/P STANDARD

REVISION

REV C

VERSION 1

Cleaveland/Price Inc.
14000 Route 993 : Trafford, PA 15085

DRAWN	CHECKED	APPROVED	DATE	SHEET	SCALE
CS	CMC		06/07/2002	1 OF 1	PROPORTIONAL

TYPE UAD FOR LOW GAS OUTLINE/ASSEMBLY

DWG NO. CB32AA01