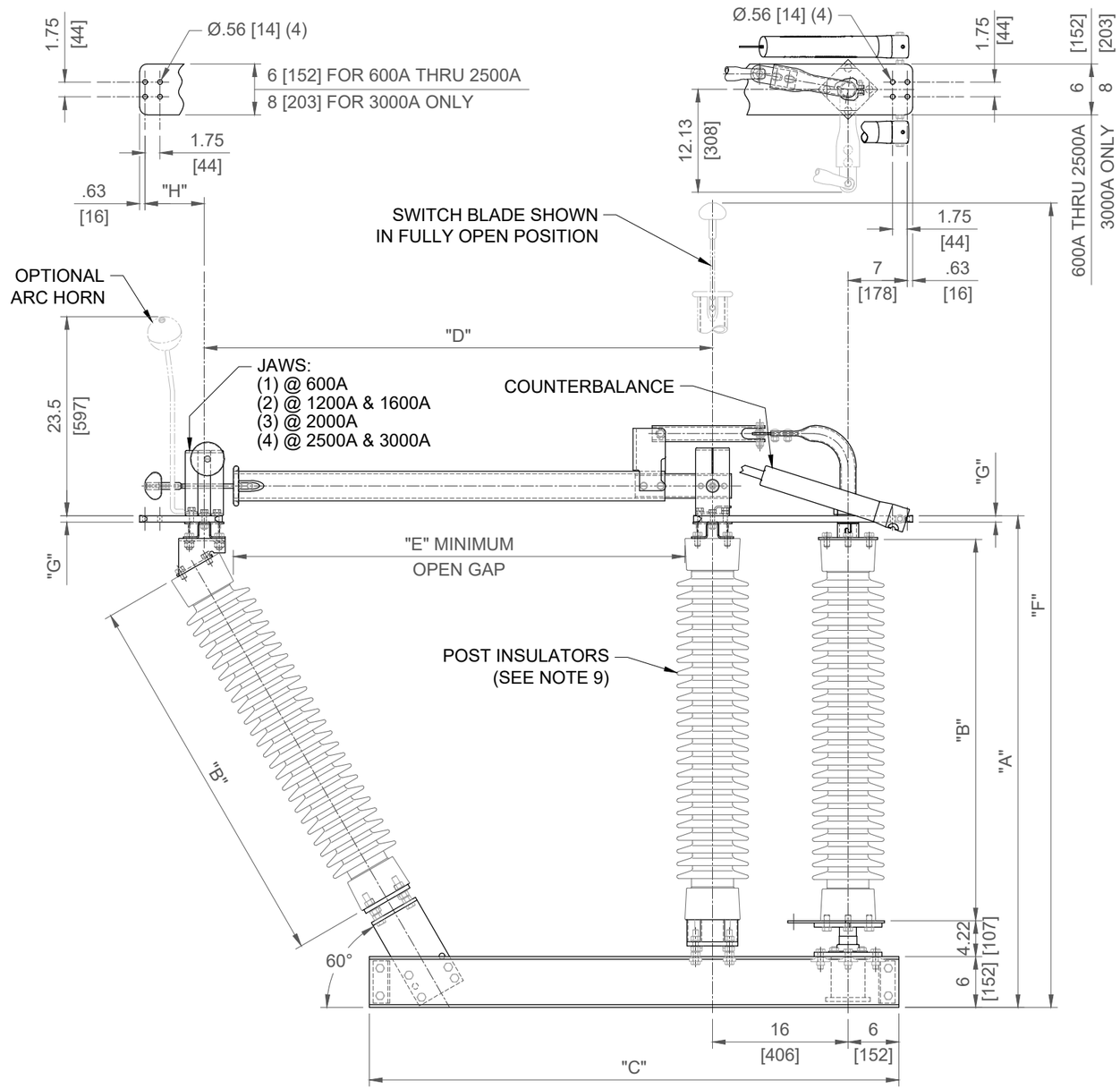

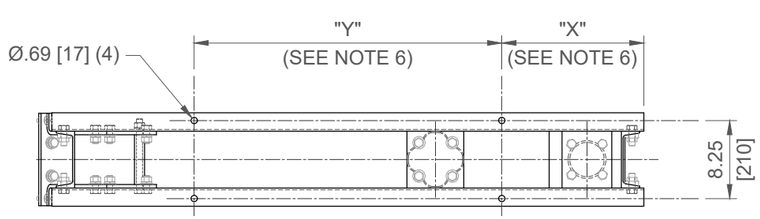

GROUP No.	RATINGS NOM kV	MAX kV	kV BIL	AMPS	MOM kA	POST INSUL. NEMA TR#	DIMENSIONS IN INCHES MILLIMETERS SHOWN IN [ ] "A"	"B"	"C"	"D"	"E"	"F"	"G"	"H"	WEIGHT/POLE (INCLINED INSULATOR) LBS.	[kg]
G01	115	123	550	600	40	286	57.78 [1468]	45 [1143]	62.5 [1588]	60 [1524]	50 [1270]	126.84 [3222]	.50 [13]	7 [178]	881	[400]
G02				1200	61										894	[406]
G03				1600	70										903	[410]
G04				2000	100		58.03 [1474]					128.53 3265]	.75 [19]		908	[412]
G05				2500	100		58.28 [1480]					130.28 [3309]	1.0 [25]	10 [254]	933	[423]
G06				3000	120										958	[435]
G07	138	145	650	600	40	288	66.78 [1696]	54 [1372]	67.25 [1708]	70 [1778]	60 [1524]	145.84 [3704]	.50 [13]	7 [178]	971	[440]
G08				1200	61										983	[446]
G09				1600	70										1003	[455]
G10				2000	100		67.03 [1703]					147.53 [3747]	.75 [19]		1008	[457]
G11				2500	100		67.28 [1709]					149.28 [3792]	1.0 [25]	10 [254]	1034	[469]
*G12				3000	120										1050	[476]
G13	161	170	750	600	40	291	74.78 [1899]	62 [1575]	70.63 [1794]	78 [1981]	68 [1727]	161.84 [4111]	.50 [13]	7 [178]	1063	[482]
G14				1200	61										1076	[488]
G15				1600	70										1091	[495]
G16				2000	100		75.03 [1905]					163.53 [4154]	.75 [19]		1096	[497]
G17				2500	100		75.28 [1912]					165.28 [4198]	1.0 [25]	10 [254]	1121	[508]
*G18				3000	120										1146	[520]

NOTES:
1. ALUMINUM TERMINAL PADS.
2. SILVER CONTACTS.
3. ALL COPPER PARTS ARE TIN PLATED ALL OVER.
4. HOT-DIP GALV. STEEL CHANNEL BASE.
5. ALL DIMENSIONS ARE IN INCHES.
6. CUSTOMER TO SUPPLY THE "X" & "Y" DIMENSIONS.
7. DIMENSIONS IN [ ] ARE IN MILLIMETERS.
8. WEIGHTS IN [ ] ARE IN KILOGRAMS.
9. INSULATORS ARE INVERTED FOR UNDERHUNG MOUNTING CONFIGURATION. (SEE NOTE 10)
10. GROUP NUMBERS SHOWN WITH * ARE NOT AVAILABLE IN UNDERHUNG MOUNTING CONFIGURATION.

REV					
A	Cleaveland/Price Inc. 14000 Route 993 : Trafford, PA 15085				
VERSION 1	DRAWN RC	CHECKED RWS	APPROVED	DATE 11/29/2016	SWITCH STYLE REFERENCE NUMBER C06B039
V2-CAV ALUMINUM VERTICAL BREAK SWITCH OUTLINE ~ 115 TO 161kV, 600 TO 3000 AMP, 5" B.C. INSULATORS, 6" DOUBLE CHANNEL BASE WITH INCLINED JAW INSULATOR					DWG NO. C06B118