kV NOM.	345
kV MAX.	362
kV BIL	1300
AMPS	4000
ASYM. kA	120
PEAK	195
SHORT TIME	75
WT./POLE	1996 lbs.

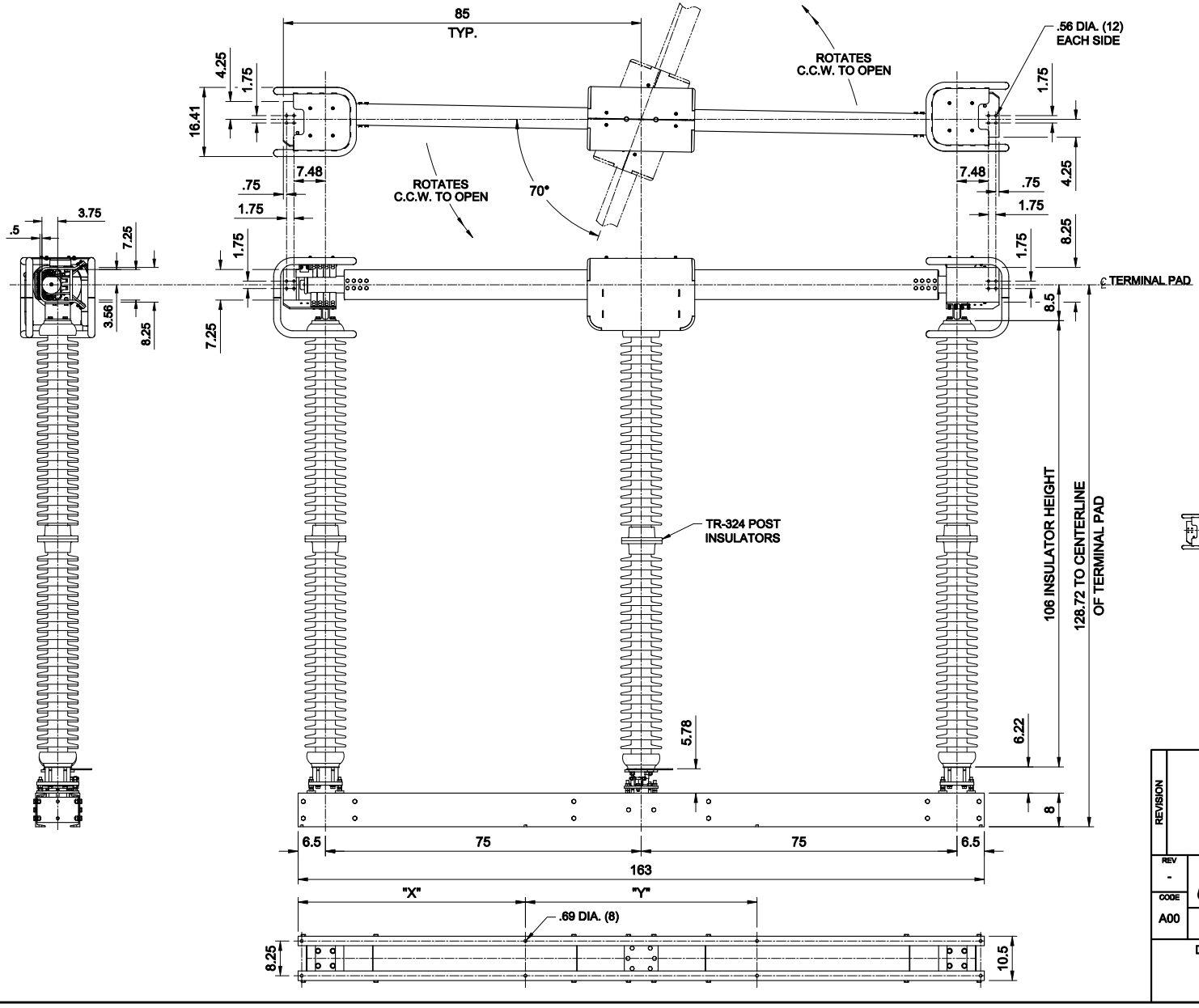

NOTES:
1. ALUMINUM TERMINAL PADS.
2. SILVER PLATED CONTACTS.
3. ALL COPPER PARTS ARE TIN PLATED ALL OVER.
4. HOT-DIP GALV. STEEL CHANNEL BASE.
5. ALL DIMENSIONS ARE IN INCHES.
6. C.C.W. SWING AS SHOWN.
   C.W. SWING OPPOSITE HAND.
7. CUSTOMER TO SUPPLY THE "X" & "Y" DIMENSIONS.

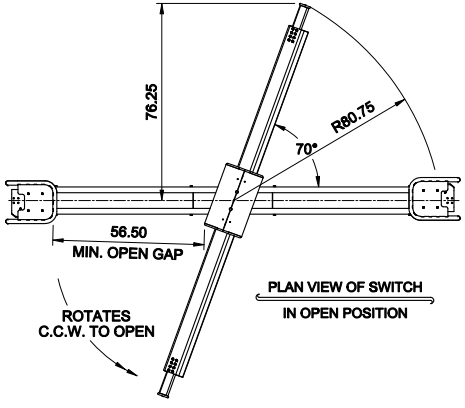

PLAN VIEW OF SWITCH
IN OPEN POSITION

REVISION				
REV -	Cleaveland/Price Inc. 14000 Route 993 : Trafford, PA 15085			
CODE A00	DRAWN DRS	CHECKED JRS	DATE 01/18/2016	SWITCH STYLE REFERENCE NUMBER -
DB-A ALUMINUM DOUBLE SIDE BREAK DISCONNECT SWITCH 345kV, 4000A, 5" B.C. INSULATORS, & 8" DOUBLE CHANNEL BASE				DWG NO. C04B121