GROUP NO.	RATINGS kV NOM.	kV MAX.	kV BIL	AMPS	kA MOM.	POST INSUL NEMA TR*	DIMENSIONS IN INCHES *MILLIMETERS SHOWN IN ITALICS* "A"	"B"	"C"	"D"	"E"	"R"	WEIGHT/POLE (INCL. INSUL.) LBS	*KG*
G01	7.2	8.25	95	600	40	202	14.50 *368*	7.5 *191*	28 *711*	18 *457*	7 *178*	15 *381*	65	*29.5*
G02				1200	61								70	*31.8*
G03				2000	70		15.12 *384*						77	*35.0*
G04	14.4	15.5	110	600	40	205	17 *432*	10 *254*	28 *711*	18 *457*	10 *254*	15 *381*	75	*34.1*
G05				1200	61								80	*36.3*
G06				2000	70		17.62 *448*						87	*39.5*
G07	23	25.8	150	600	40	208	21 *533*	14 *356*	36 *914*	26 *660*	12 *305*	23 *584*	109	*49.5*
G08				1200	61								114	*51.8*
G09				2000	70		21.62 *549*						121	*54.9*
G10	34.5	38	200	600	40	210	25 *635*	18 *457*	36 *914*	26 *660*	18 *457*	23 *584*	120	*54.5*
G11				1200	61								125	*56.8*
G12				2000	70		25.62 *651*						132	*59.9*
G13	46	48.3	250	600	40	214	29 *737*	22 *559*	41 *1041*	31 *787*	22 *559*	28 *711*	167	*75.8*
G14				1200	61								176	*79.9*
G15				2000	70		29.62 *752*						188	*85.4*
G16	69	72.5	350	600	40	216	37 *940*	30 *762*	52 *1321*	42 *1067*	32 *813*	39 *991*	230	*104.4*
G17				1200	61								238	*108.1*
G18				2000	70		37.62 *956*						253	*114.1*

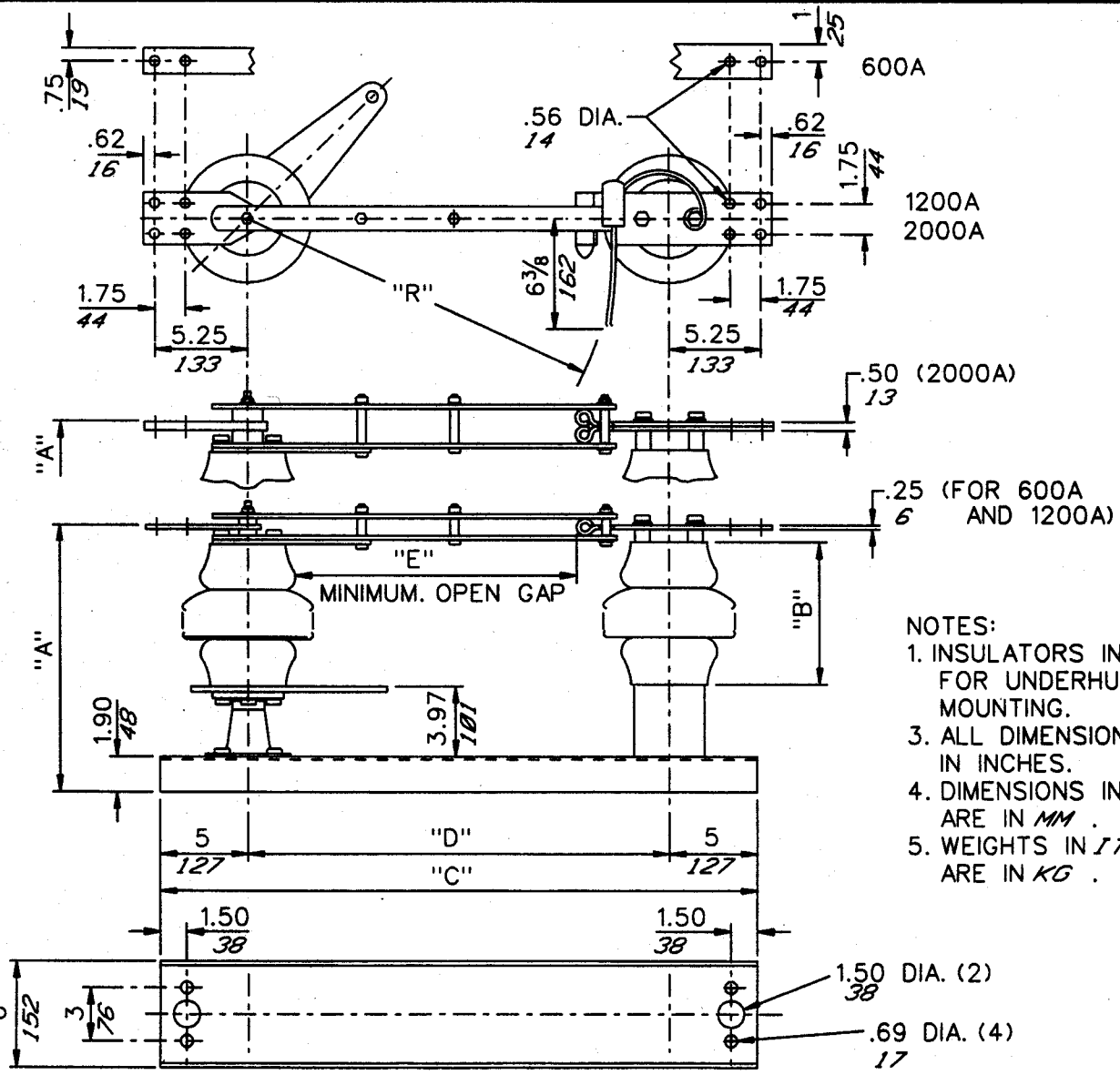

NOTES:
1. INSULATORS INVERTED FOR UNDERHUNG MOUNTING.
3. ALL DIMENSIONS ARE IN INCHES.
4. DIMENSIONS IN *ITALICS* ARE IN *MM* .
5. WEIGHTS IN *ITALICS* ARE IN *KG* .

CODE A 00

Cleaveland / Price Inc. 14000 RT. 993 Trafford, PA 15085-9550

DATE 12-08-87 REV. E

RL-C COPPER SIDE BREAK DISCONNECT SWITCH
7.2kV-69kV; 600A-2000A; WITH 3"B.C. INSULATORS

DRAWN GH CHECKED SF

DRAWING No. C104A100